en

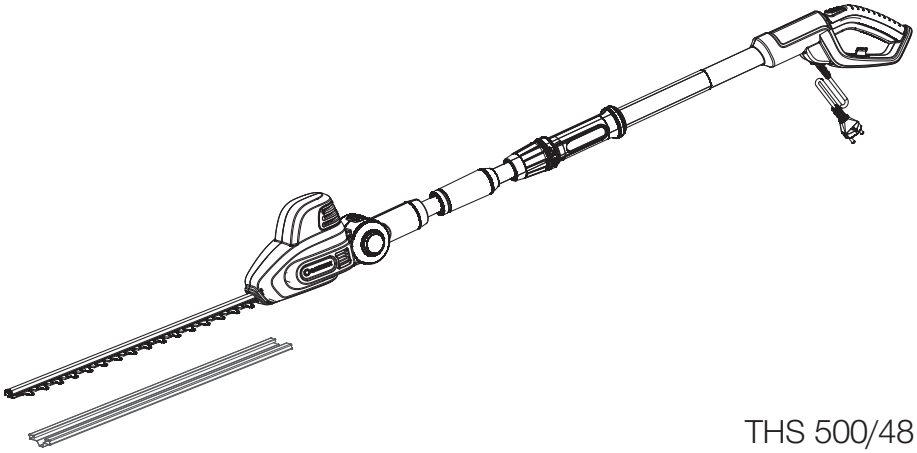

THS 500/48 Art. 8883

en **Operator's manual**
Telescopic Hedge Trimmer

S1

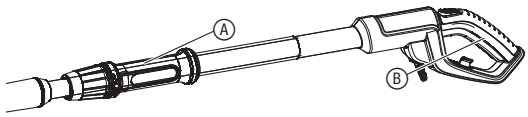

A1

A2

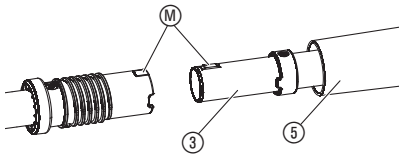

A3

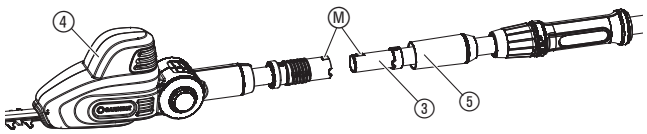

O1

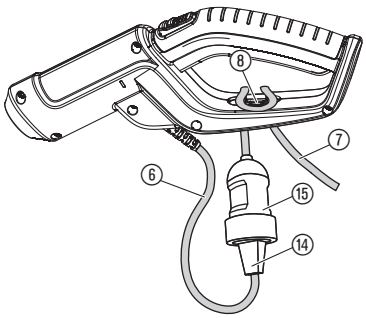

O2

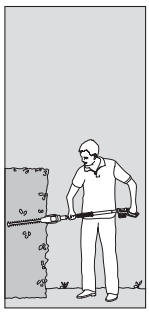

O3

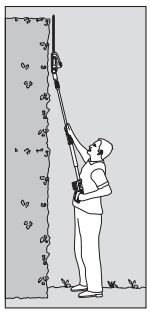

O4

O5

O6

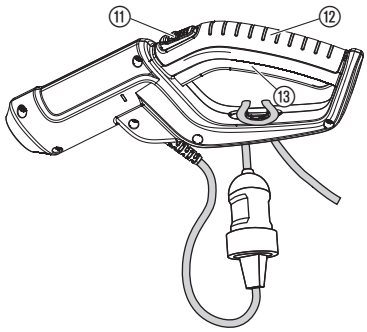

O7

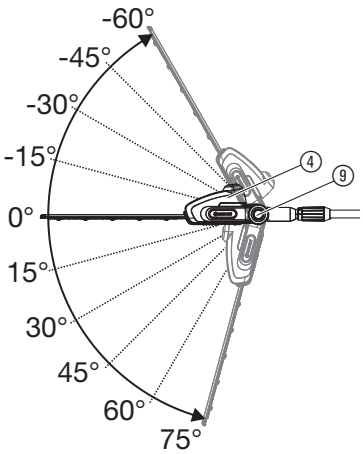

O8

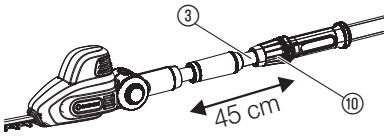

en Telescopic Hedge Trimmer

1. SAFETY 8
2. ASSEMBLY 9
3. OPERATION 9
4. MAINTENANCE 10
5. STORAGE 10
6. TROUBLESHOOTING 10
7. TECHNICAL DATA 10
8. ACCESSORIES 11
9. SERVICE 11
10. DISPOSAL 11

Original instructions.

This product is not intended for use by persons (including children) with reduced physical, sensory or mental capabilities, or lack of experience and knowledge, unless they have been given supervision or instruction concerning use of the product by a person responsible for their safety. Children should be supervised to ensure that they do not play with the product.

Intended use:

This **GARDENA Telescopic Hedge Trimmer** is used to cut hedges, shrubs and grass coverings in private domestic gardens and allotments.

DANGER! Risk of injury!

→ **Do not use the unit to cut lawns/lawn edges, to chop up material or to make compost.**

1. SAFETY

IMPORTANT!
Read the operator's manual carefully before use and keep for future reference.

If not used properly this product can be dangerous. The warnings and safety instructions must be followed to ensure reasonable safety and efficiency in using this product. The operator is responsible for following the warnings and instructions in this manual and on the product. Never use the product unless the guards provided by the manufacturer are in the correct position.

Symbols on the product:

Read operator's manual.

Wear safety glasses and ear protection.

Danger – Keep hands away from blade.

Do not let the unit become wet with rain or other moisture. Do not leave the unit outdoors while it is raining.

Disconnect the mains cable if the cable becomes damaged or cut.

Risk of fatal injury due to electric shock! Keep at least 10 m away from electricity lines.

General safety warnings

General machine safety warnings

WARNING!

Read all safety warnings, instructions, illustrations and specifications provided with this machine. *Failure to follow the warnings and instructions may result in electric shock, fire and/or serious injury.*

Save all warnings and instructions for future reference.
The term "machine" in the warnings refers to your mains operated (corded) machine or battery operated (cordless) machine.

1) Work area safety

a) **Keep work area clean and well lit.** *Cluttered or dark areas invite accidents.*

b) **Do not operate machines in explosive atmospheres, such as in the presence of flammable liquids, gases or dust.** *Machines create sparks which may ignite the dust or fumes.*

c) **Keep children and bystanders away while operating a machine.** *Distractions can cause you to lose control.*

2) Electrical safety

a) **Machine plugs must match the outlet. Never modify the plug in any way. Do not use any adaptor plugs with earthed (grounded) machines.** *Unmodified plugs and matching outlets will reduce risk of electric shock.*

b) **Avoid body contact with earthed or grounded surfaces, such as pipes, radiators, ranges and refrigerators.** *There is an increased risk of electric shock if your body is earthed or grounded.*

c) **Do not expose machines to rain or wet conditions.** *Water entering a machine will increase the risk of electric shock.*

d) **Do not abuse the cord. Never use the cord for carrying, pulling or unplugging the machine. Keep cord away from heat, oil, sharp edges or moving parts.** *Damaged or entangled cords increase the risk of electric shock.*

e) **When operating a machine outdoors, use an extension cord suitable for outdoor use.** *Use of a cord suitable for outdoor use reduces the risk of electric shock.*

f) **If operating a machine in a damp location is unavoidable, use a residual current device (RCD) protected supply.** *Use of an RCD reduces the risk of electric shock.*

3) Personal safety

a) **Stay alert, watch what you are doing and use common sense when operating a machine. Do not use a machine while you are tired or under the influence of drugs, alcohol or medication.** *A moment of inattention while operating machines may result in serious personal injury.*

b) **Use personal protective equipment. Always wear eye protection.** *Protective equipment such as dust mask, non-skid safety shoes, hard hat, or hearing protection used for appropriate conditions will reduce personal injuries.*

c) **Prevent unintentional starting. Ensure the switch is in the OFF-position before connecting to power source and/or battery pack, picking up or carrying the machine.** *Carrying machines with your finger on the switch or energising machines that have the switch on invites accidents.*

d) **Remove any adjusting key or wrench before turning the machine on.** *A wrench or a key left attached to a rotating part of the machines may result in personal injury.*

e) **Do not overreach. Keep proper footing and balance at all times.** *This enables better control of the machine in unexpected situations.*

f) **Dress properly. Do not wear loose clothing or jewellery. Keep your hair, clothing and gloves away from moving parts.** *Loose clothes, jewellery or long hair can be caught in moving parts.*

g) **If devices are provided for the connection of dust extraction and collection facilities, ensure these are connected and properly used.** *Use of dust collection can reduce dust-related hazards.*

h) **Do not let familiarity gained from frequent use of machines allow you to become complacent and ignore machine safety principles.** *A careless action can cause severe injury within a fraction of a second.*

4) Machine use and care

a) **Do not force the machine. Use the correct machine for your application.** *The correct machine will do the job better and safer at the rate for which it was designed.*

b) **Do not use the machine if the switch does not turn it on and off.** *Any machine that cannot be controlled with the switch is dangerous and must be repaired.*

c) **Disconnect the plug from the power source and/or the battery pack from the machine before making any adjustments, changing accessories, or storing machines.** *Such preventive safety measures reduce the risk of starting the machine accidentally.*

d) **Store idle machines out of the reach of children and do not allow persons unfamiliar with the machine or these instructions to operate the machine.** *Machines are dangerous in the hands of untrained users.*

e) **Maintain machines. Check for misalignment or binding of moving parts, breakage of parts and any other condition that may affect the machine's operation. If damaged, have the machine repaired before use.** *Many accidents are caused by poorly maintained machines.*

f) **Keep cutting tools sharp and clean.** *Properly maintained cutting tools with sharp cutting edges are less likely to bind and are easier to control.*

g) **Use the machine, accessories and tool bits etc. in accordance with these instructions, taking into account the working conditions and the work to be performed.** *Use of the machine for operations different from those intended could result in a hazardous situation.*

h) **Keep handles and grasping surfaces dry, clean and free from oil and grease.** *Slippery handles and grasping surfaces do not allow for safe handling and control of the machine in unexpected situations.*

5) Service

Have your machine serviced by a qualified repair person using only identical replacement parts. *This will ensure that the safety of the machine is maintained.*

Hedge trimmer safety warnings

a) **Keep all parts of the body away from the blade. Do not remove cut material or hold material to be cut when blades are moving.** *Blades continue to move after the switch is turned off. A moment of inattention while operating the hedge trimmer may result in serious personal injury.*

b) **Carry the hedge trimmer by the handle with the blade stopped and taking care not to operate any power switch.** *Proper carrying of the hedge trimmer will decrease the risk of inadvertent starting and resultant personal injury from the blades.*

c) **When transporting or storing the hedge trimmer, always fit the blade cover.** *Proper handling of the hedge trimmer will decrease the risk of personal injury from the blades.*

d) **When clearing jammed material or servicing the unit, make sure all power switches are off and the power cord is disconnected.** *Unexpected actuation of the hedge trimmer while clearing jammed material or servicing may result in serious personal injury.*

e) **Hold the hedge trimmer by insulated gripping surfaces only, because the blade may contact hidden wiring or its own cord.** *Blades contacting a "live" wire may make exposed metal parts of the hedge trimmer "live" and could give the operator an electric shock.*

f) **Keep all power cords and cables away from cutting area.** *Power cords or cables may be hidden in hedges or bushes and can be accidentally cut by the blade.*

g) **Do not use the hedge trimmer in bad weather conditions, especially when there is a risk of lightning.** *This decreases the risk of being struck by lightning.*

Extended-reach hedge trimmer safety warnings

a) **To reduce the risk of electrocution, never use the extended-reach hedge trimmer near any electrical power lines.** *Contact with or use near power lines may cause serious injury or electric shock resulting in death.*

b) **Always use two hands when operating the extended-reach hedge trimmer.** *Hold the extended-reach hedge trimmer with both hands to avoid loss of control.*

c) **Always use head protection when operating the extended-reach hedge trimmer overhead.** *Falling debris can result in serious personal injury.*

Search hedges and bushes for hidden objects (e. g. wire fences and hidden wires).

The use of a residual current device (RCD) with a trip current of 30 mA or less is recommended.

Hold the hedge trimmer with both hands on both handles.

The hedge trimmer is intended for use when the user is standing on the ground and not on a ladder or other unstable surface.

Before using the hedge trimmer, make sure that the locking devices of all moving parts (e. g. the extended shaft and the pivot element) are in the locked position.

Additional safety warnings

DANGER! Small parts can be easily swallowed. There is also a risk that the polybag can suffocate toddlers. Keep toddlers away when you assemble the product.

Work area safety

Only use the unit in the manner and for the functions described in these instructions.

The operator or user is responsible for accidents or hazards occurring to other people or their property.

While operation and transport pay special attention to the hazard for third parties posed by the increased working radius when the telescopic tube is extended.

Risk of stumbling. While operation pay attention to the cable.

DANGER! When wearing hearing protection, and due to the noise produced by the unit, the operator may not notice persons approaching.

Do not use the unit when a thunderstorm is approaching.

Do not use the unit nearby a water.

Electrical safety

The British Standards Institute recommend the use of a Residual Current Device (R.C.D.) with a tripping current of not more than 30 mA. Check your R.C.D. every time you use it.

Before use, examine cable for damage, replace it if there are signs of damage or ageing.

If the replacement of the supply cord is necessary, this has to be done by the manufacturer or his agent in order to avoid a safety hazard.

Do not use the unit if the electric cables are damaged or worn.

Immediately disconnect from the mains electricity supply if the cable is cut, or the insulation is damaged. Do not touch the electric cable until the electrical supply has been disconnected.

Your electric cable must be untangled, tangled cables can overheat and reduce the efficiency of your unit.

Always disconnect the mains cable before disconnecting any plug, cable connector or extension cable.

Switch off, remove plug from mains and examine electric supply cable for damage or ageing before winding cable for storage. Do not repair a damaged cable, send the unit to the next GARDENA service Center or dealer authorised by GARDENA.

Always wind cable carefully, avoiding kinking.

Use only on AC mains supply voltage shown on the product rating label.

Under no circumstances should an earth be connected to any part of the unit.

If the unit starts unintentionally when the mains plug is connected, disconnect the mains at once. Contact GARDENA Service to check the unit.

DANGER! This product makes an electromagnetic field while it operates. This field may under some conditions interfere with active or passive medical implants. To decrease the risk of conditions that can possibly injure or kill, we recommend persons with medical implants to speak with their physician and the medical implant manufacturer before you operate the product.

Cables

Use only permitted extension cables as per HD 516.

→ Ask your electrical specialist.

Personal safety

Always wear suitable clothing, protective gloves, and stout shoes.

Avoid contact to the oil of the blade in particular when you react allergic with it.

Thoroughly inspect the area where the unit is to be used and remove all wires and other foreign objects.

All adjustments (inclining the blade head, altering the length of the telescopic tube) have to be made with the sheath in place, and the unit must not rest on the blade in the process.

Always hold the unit properly with both hands on both handles Ⓐ and Ⓑ **[Fig. S1]**.

Before using the unit and after any impact, check for signs of wear or damage and repair as necessary.

Never attempt to use an incomplete unit or one with an unauthorised modification.

Power tool use and care

Know how to stop the unit quickly in an emergency.

Never hold the unit by the guard.

Do not use the unit if the protection equipments (protection cover, quick blade-stop) are damaged.

Do not use ladders whilst operating the unit.

Disconnect the mains cable:

– before leaving the unit unattended for any period;
– before clearing a blockage;
– before checking, cleaning or working on the appliance;
– if you hit an object. Do not use your unit until you are sure that the entire unit is in a safe operating condition;
– if the unit starts to vibrate abnormally. Check immediately. Excessive vibration can cause injury.
– before passing to another person.

Only use the unit between 0 – 40 °C.

Maintenance and storage

RISK OF INJURY!!
Do not touch blades.

→ When finishing or interrupting work push up protection cover.

Keep all nuts, bolts and screws secure to be sure the unit is in safe working condition.

If the unit got hot during operation, let it cool down before storage.

2. ASSEMBLY

The hedger, blade, protective cover and the operation instructions are included in the scope of delivery.

DANGER! Risk of injury!
Cut injury when the unit starts accidentally.

→ Before you assemble the unit, make sure that the mains cable is disconnected and the protective cover ① is slid over the blade ② [Fig. A1]

To assemble the telescopic handle [Fig. A2/A3]:

1. Slide the telescopic pipe ③ into the motor unit ④ until you reach the stop position. Ensure that the two markings Ⓜ face each other.
2. Tighten the grey nut ⑤.

3. OPERATION

DANGER! Risk of injury!
Cut injury when the unit starts accidentally.

→ Before you connect, adjust or transport the unit, disconnect the mains cable and slide the protective cover ① over the blade ② [Fig. A1].

To connect the hedge trimmer [Fig. O1]:

DANGER! Electric shock!
To avoid damage to the mains cable ⑥ the extension cable ⑦ must be inserted into the cable lock ⑧.

→ Before you operate the unit insert the extension cable ⑦ into the cable lock ⑧.

→ Never take hold of the protective cover ① when connecting the unit.

1. Loop the extension cable ⑦, insert the loop into the cable lock ⑧ and pull tight.
2. Connect the plug ⑭ of the unit into the socket ⑮ of the extension cable.
3. Connect the extension cable ⑦ into a 230 V mains socket.

Work positions:

The unit can be operated in 4 positions (illustration similar).

- **[Fig. O2]: Side trimming: Telescopic pipe retracted**
- **[Fig. O3]: Vertical trimming at high level: Telescopic tube extended**
- **[Fig. O4]: Horizontal trimming at high level: Motor unit tilted by 75°, telescopic pipe extended**
- **[Fig. O5]: Trimming at low level: Motor unit tilted by – 60°, telescopic pipe extended**

To start the hedge trimmer [Fig. A1/O6]:

DANGER! Risk of injury!
Risk of injury if the unit does not stop when you release the start button.

→ Do not bypass the safety devices or switches. For example do not attach the starting lock-out ⑪ or start button ⑬ to the handle.

To start:

The unit is fitted with a starting lock-out ⑪ to prevent the unit from being turned on by accident.

1. Remove the protective cover ① from the blade ②.
2. Hold the telescopic pipe of the unit with one hand and the handle ⑫ with the other hand.
3. Push the starting lock-out ⑪ forwards and push the start button ⑬. *The unit will start.*
4. Release the starting lock-out ⑪.

To stop:

1. Release the start button ⑬.
2. Slide the protective cover ① over the blade ②.

To tilt the motor unit [Fig. O7]:

For cutting at high and low level, the motor unit ④ can be tilted at an angle of 75° to – 60° in 15° increments.

1. Keep the orange button ⑨ pressed.
2. Tilt the motor unit ④ in the required direction.
3. Release the orange button ⑨ and allow the motor unit ④ to engage.

To extend the telescopic pipe [Fig. O8]:

For cutting at high and low heights, the telescopic pipe ③ can be continuously extended by up to 45 cm.

1. Loosen the orange nut ⑩.
2. Extend the telescopic pipe ③ to the required length.
3. Tighten the orange nut ⑩ again.

4. MAINTENANCE

[Fig. A1]:

DANGER! Risk of injury!
Cut injury when the unit starts accidentally.

→ Before you maintain the unit, make sure that the mains cable is disconnected and the protective cover ① is slid over the blade ②.

To clean the hedge trimmer:

DANGER! Risk of injury!
Risk of injury and risk of damage to the product.

→ Do not clean the product with water or with a water jet (in particular high-pressure water jet).

→ Do not clean with chemicals including petrol or solvents. Some can destroy critical plastic parts.

The airflow slots must always be clean.

1. Clean the unit with a damp cloth.
2. Clean the airflow slots with a soft brush (do not use a screwdriver).
3. Lubricate the blade ② with a low viscosity oil (e. g. GARDENA spray-oil **Art. 2366**). Avoid contact with the plastic parts.

5. STORAGE

To put into storage [Fig. A1]:

The product must be stored away from children.

1. Disconnect the mains cable.
2. Clean the unit (see 4. MAINTENANCE) and slide the protective cover ① over the blade ②.
3. Stow the unit in a dry area where it has protection from frost.

6. TROUBLESHOOTING

DANGER! Risk of injury!
Cut injury when the unit starts accidentally.

→ Before you troubleshoot the unit, make sure that the mains cable is disconnected and the protective cover ① is slid over the blade ② [Fig. A1].

Problem	Possible Cause	Remedy
Unit does not start	Extension cable not connected or damaged.	→ Connect the extension cable or if necessary replace it.
	Blade blocked.	→ Remove obstacle.
Unit can no longer be stopped	Start button is stuck.	→ Disconnect the mains cable and loosen start button.
Hedge is not cleanly cut	Blade blunt or damaged.	→ Have blade replaced by GARDENA Service.

NOTE: For any other malfunctions please contact the GARDENA service department. Repairs must only be done by GARDENA service departments or specialist dealers approved by GARDENA.

7. TECHNICAL DATA

Telescopic Hedge Trimmer	Unit	Value (Art. 8883)
Motor power consumption	W	500
Mains voltage / Mains frequency	V / Hz	230 / 50
Strokes	/ min.	1,600
Length of blade	cm	48
Tooth gap of blade	mm	25
Range of extension of telescopic tube	cm	0 – 45
Weight (approx.)	kg	4.1
Sound pressure level L_{pA} [1] Uncertainty k_{pA}	dB (A)	83 3.0
Sound power level L_{WA} [2]: measured/guaranteed Uncertainty k_{WA}	dB (A)	96 / 98 2.3
Hand/arm vibration a_{vhw} [1]	m/s²	3.8 ± 1.5

Measuring process complying with: [1] EN 62841-4-2 [2] RL 2000/14/EG

NOTE: The stated vibration emission value has been measured according to a standardized test procedure and can be used for comparison of one electric power tool with another. It can also be used for preliminary evaluation of exposure. The vibration emission value can vary during actual use of the electric power tool.

8. ACCESSORIES

GARDENA Maintenance Oil	Extends the life of the blade.	**Art. 2366**

9. SERVICE

Please contact the address on the back page.

10. DISPOSAL

(in accordance with RL2012/19/EC)

The product must not be disposed of to normal household waste. It must be disposed of in line with local environmental regulations.

IMPORTANT!

→ Dispose of the product through or via your municipal recycling collection centre.

CE

de	**EU-Konformitätserklärung** **Teleskop-Heckenschere** **Art.-Nr.**	Der Unterzeichnende bestätigt als Bevollmächtigte des Herstellers, der GARDENA Germany AB, PO Box 7454, S-103 92, Stockholm, Schweden, dass das (die) nachfolgend bezeichnete(n) Gerät(e) in der von uns in Verkehr gebrachten Ausführung die Anforderungen der harmonisierten EU-Richtlinien, EU-Sicherheitsstandards und produktspezifischen Standards erfüllt / erfüllen. Bei einer nicht mit uns abgestimmten Änderung des (der) Geräte(s) verliert diese Erklärung ihre Gültigkeit. Konformitätsbewertungsverfahren nach 2000/14/EG Art. 14 Anhang V, Schall-Leistungspegel: gemessen / garantiert(1). Hinterlegte Dokumentation(2) | Anbringungsjahr der CE-Kennzeichnung: 2015 | Ulm, den 12.05.2023
en	**EC Declaration of Conformity** **Telescopic hedge trimmer** **Art. No.**	The undersigned hereby certifies as the authorized representative of the manufacturer, GARDENA Germany AB, PO Box 7454, S-103 92, Stockholm, Sweden, that, when leaving our factory, the unit(s) indicated below is / are in accordance with the harmonised EU guidelines, EU standards of safety and product specific standards. This certificate becomes void if the unit(s) is / are modified without our approval. Conformity Assessment procedure according to 2000/14/EC Art.14 Annex V, Noise level: measured / guaranteed(1). Deposited Documentation(2) | Year of CE marking: 2015 | Ulm, 12/05/2023
fr	**Déclaration de conformité CE** **Taille-haies télescopique** **Référence**	Le soussigné déclare, en tant que mandataire du fabricant, la GARDENA Germany AB, PO Box 7454, S-103 92, Stockholm, Suède, qu'à la sortie de ses usines le matériel neuf désigné ci-dessous était conforme aux prescriptions des directives européen-nes énoncées ci-après et conforme aux règles de sécurité et autres règles qui lui sont applicables dans le cadre de l'Union européenne. Toute modification portée sur ce(s) produit(s) sans l'accord express de notre part supprime la validité de ce certificat. Procédure d'évaluation de la conformité: Selon 2000/14/CE art. 14 Annexe V, Puissance acoustique: mesurée / garantie(1). Documentation déposée(2) | Année d'apposition du marquage CE: 2015 | Fait à Ulm 12/05/2023
bg	**ЕС-Декларация за съответствие** **Телескопична ножица за жив плет** **№ на артикула**	Долуподписаният удостоверява като пълномощник на производителя GARDENA Germany AB, PO Box 7454, S-103 92, Стокхолм, Швеция, че по-долу описаният(ите) уред(и) във варианта на изпълнение пуснат от нас на пазара изпълнява / изпълняват изискванията на хармонизираните ЕС-директиви, ЕС-норми за безопасност и специфичните норми за продукцията. В случай на промяна на уреда(ите), която не е съгласувана с нас, тази декларация губи своята валидност. Процедура за оценка на съответствието съгласно 2000/14/ЕО, член 14, приложение V, Ниво на шум: измерено / гарантирано(1). Внесени документи(2) | Година на CE маркировка: 2015 | Улм, 12.05.2023г.
cs	**EU prohlášení o shodě** **Teleskopické nůžky na živý plot** **Č. Výrobku**	Podepsaná osoba zplnomocněná výrobcem GARDENA Germany AB, PO Box 7454, S-103 92, Stockholm, Švédsko potvrzuje, že v následujícím uvedený(-é) přístroj(-e) v provedení námi uvedeném na trh splňuje / splňují požadavky směrnic EU, bezpečnost-ních norem EU a norem specifických pro výrobek. V případě změny přístroje(-ů), která s námi nebyla dohodnuta, ztrácí toto pro-hlášení svou platnost. Postup posouzení shody proveden podle nařízení 2000/14/ES, čl.14, příloha V, Hladina hluku: naměřená / zaručená(1). Uložená dokumentace(2) | Rok označení CE: 2015 | Ulm, 12.5.2023
da	**EU-overensstemmelseserklæring** **Teleskopisk hækkeklipper** **Vare-nr.**	Underskriveren bekræfter som fuldmægtig for producenten, GARDENA Germany AB, PO Box 7454, S-103 92, Stockholm, Sverige, at det (de) efterfølgende betegnede apparat(er) i den af os markedsførte udførelse opfylder kravene i de harmoniserede EU-direk-tiver, EU-sikkerhedsstandarder og produktspecifikke standarder. Foretages en ændring af apparatet / apparaterne, der ikke er aftalt med os, mister denne erklæring sin gyldighed. Procedure for overensstemmelsesvurdering i henhold til 2000/14/EF art. 14 bilag V, Støjniveau: målt / garanteret(1). Deponeret dokumentation(2) | År for CE-mærkning: 2015 | Ulm, 12-05-2023
el	**Δήλωση συμμόρφωσης ΕΕ** **Τηλεσκοπικό μπορντουροψάλιδο** **Αρ. είδους**	Ο υπογεγραμμένος βεβαιώνει ως πληρεξούσιος του κατασκευαστή, της εταιρείας GARDENA Germany AB, T.Θ. 7454, S-103 92, Στοκχόλμη, Σουηδία, ότι η (οι) παρακάτω αναφερόμενη(ες) συσκευή(ές) στην έκδοση που τίθεται από εμάς σε κυκλοφορία πληροί/πλη-ρούν τις απαιτήσεις των εναρμονισμένων οδηγιών της ΕΕ, προτύπων ασφαλείας της ΕΕ και των ειδικών για το προϊόν προτύπων. Σε περίπτωση τροποποίησης της (των) συσκευής(ών) χωρίς προηγούμενη συνεννόηση με την εταιρεία μας παύει να ισχύει η δήλωση. Διαδικασία αξιολόγησης της συμμόρφωσης σύμφωνα με το άρθρο 14 του παραρτήματος V της 2000/14/ΕΚ, Επίπεδο θορύβου: μετρούμενο / εγγυημένο(1). Κατατεθείσα τεκμηρίωση(2) | Έτος σήμανσης CE: 2015 | Ulm, 2023-05-12
es	**Declaración de conformidad de la UE** **Recortasetos telescópico** **N.º de artículo**	El firmante confirma, en calidad de apoderado del fabricante GARDENA Germany AB, PO Box 7454, S-103 92 Estocolmo (Suecia), que el / los aparato(s) mencionado(s) a continuación cumple(n), en la versión lanzada al mercado por nuestra empresa, los requisi-tos de las directivas de la UE armonizadas, los estándares de seguridad de la UE y los estándares específicos del producto. La presente declaración perderá su validez si se modifica(n) el / los aparato(s) sin previa aprobación por nuestra parte. Procedimiento de evaluación de la conformidad según la norma 2000/14/CE Art. 14 Anexo V, Nivel sonoro: medido/garantizado(1). Documentación depositada(2) | Año de marcado CE: 2015 | Ulm (Alemania), 12-05-2023
et	**EU-vaatimustenmukaisuusvakuutus** **Teleskoop-hekilõikur** **Tootenr**	Allakirjutanu kinnitab tootja, GARDENA Germany AB, PO Box 7454, S-103 92, Stockholm, Rootsi, poolt volitatud isikuna, et järgnevalt nimetatud seade (seadmed) täidab (täidavad) meie poolt turule toodud versiooni kujul harmoneeritud EL-i direktiivide, EL-i ohutusstandardite ja tootepõhiste standardite nõuded. Seadmel (seadmetel) meiega kooskõlastamata muudatuse tegemise korral kaotab käesolev deklaratsioon oma kehtivuse. Vastavushindamismenetlus vastavalt 2000/14/EÜ artiklile 14 V lisa, Müratase: mõõdetud / garanteeritud(1). Talletatud dokumentatsioon(2) | CE-märgise aasta: 2015 | Ulm, 2023-05-12
fi	**EY-vaatimustenmukaisuusvakuutus** **Teleskooppivarrellinen pensasleikkuri** **Tuotenumero**	Allekirjoittanut vahvistaa valmistajan, GARDENA Germany AB, PO Box 7454, S-103 92, Tukholma, Ruotsi, valtuuttamana hen-kilönä, että seuraava laite täyttää / seuraavat laitteet täyttävät meidän toimittamassa mallissa yhdenmukaistettujen EU-direktiivien, EU-turvallisuusmääräysten ja tuotekohtaisten standardien vaatimukset. Laitteen / laitteiden muutoksissa, joista ei ole sovittu meidän kanssamme, menettää tämä selvitys voimassaolonsa. Vaatimustenmukaisuuden arviointi direktiivin 2000/14/EY 14 artiklan liitteen V mukaisesti, Äänitaso: mitattu / taattu(1). Dokumentaatio(2) | CE-merkinnän vuosi: 2015 | Ulm, 12.5.2023
hr	**EU izjava o sukladnosti** **Teleskopske škare za živicu** **Kat. br.**	Dolje potpisani kao opunomoćenik proizvođača, tvrtke GARDENA Germany AB, PO Box 7454, S-103 92, Stockholm, Švedska, potvrđujemo da niže navedeni uređaj(i) odgovarajuće izvedbe koji / koje smo iznijeli na tržište ispunjavaju kriterije usklađenih direktiva EU i sigurnosnih standarda EU kao i standarda koji se tiču proizvoda. Ova izjava gubi valjanost u slučaju izmjena uređaja koje nisu prethodno ugovorene s nama. Postupak procjene sukladnosti prema sa Direktivom 2000/14/EC čl.14 Dodatkom V, Razina buke: izmjerena / garantirana(1). Prikupljena dokumentacija(2) | Godina CE oznake: 2015 | Ulm, 12.05.2023.
hu	**EU megfelelőségi nyilatkozat** **Teleszkópos sövénynyíró** **Cikksz.**	Az alulírott, a GARDENA Germany AB, Pf. 7454, S-103 92, Stockholm, Svédország megbízotti minőségében megerősíti, hogy az általunk alábbi kivitelben forgalomba hozott, lent nevezett eszköz(ök) megfelel(nek) az uniós irányelvekkel összhangba hozott nemzeti előírások követelményeinek, az EU biztonsági szabványainak és a konkrét termékre vonatkozó szabványoknak. Az eszköz(ök)nek velünk nem egyeztetett módosítása esetén ez a nyilatkozat érvényét veszti. Megfelelőségértékelési eljárás a 2000/14/EK irányelv 14. cikkének V. függeléke szerint, Zajszint: mért / garantált(1). Benyújtott dokumentáció(2) | A CE-jelzés éve: 2015 | Ulm, 2023-05-12
it	**Dichiarazione di conformità UE** **Tagliasiepi telescopica** **Art. n.**	Il sottoscritto, in quanto soggetto autorizzato dal produttore, GARDENA Germany AB, PO Box 7454, S-103 92, Stoccolma, Svezia, dichiara che l'apparecchio/gli apparecchi di seguito denominato / i, nella versione da noi immessa in commercio, soddisfa / no i requisiti delle direttive UE armonizzate, degli standard di sicurezza europei e degli standard specifici per il prodotto. La presente dichiarazione perde di validità in caso di modifica dell'apparecchio / degli apparecchi non concordata con noi. Procedura di valutazione della conformità ai sensi dell'art. 14 2000/14/CE, Allegato V, Livello di rumorosità: misurato / garantito(1). Documentazione depositata(2) | Anno di marcatura CE: 2015 | Ulm, 2023-05-12
lt	**ES atitikties deklaracija** **Teleskopinės gyvatvorių žirklės** **Straipsnio nr.**	Pasirašantysis, kaip gamintojo, GARDENA Germany AB, PO Box 7454, S-103 92, Stokholmas, Švedija, įgaliotasis atstovas patvir-tina, kad žemiau nurodyto(-ų) prietaiso(-ų) modeliai, kurie buvo pagaminti mūsų gamyklose, atitinka darniąsias ES direktyvas, ES saugumo standartus ir specifinius gaminio standartus. Atlikus bet kokį prietaiso(-ų) pakeitimą, kuris nėra suderintas su mumis, ši deklaracija praranda galiojimą. Atitikties įvertinimo procedūra pagal 2000/14/EB direktyvos 14 straipsnio V priedą, Triukšmo lygis: išmatuotas / garantuojamas(1). Pridėta dokumentacija(2) | CE žymėjimo metai: 2015 | Ulm, 2023-05-12
lv	**ES atbilstības deklarācija** **Teleskopiskās dzīvžoga šķēres** **Izstr. nr.**	Zemā parakstījusies persona kā ražotāja, uzņēmuma GARDENA Germany AB, PO Box 7454, S-103 92, Stokholma, Zviedrija, pilnvarotais pārstāvis apstiprina, ka tālāk norādītā(-s) ierīce(-s) izpildījumā, kādā mēs to (tās) esam laiduši tirgū, atbilst saskaņota-jām ES direktīvām, ES drošības standartiem un konkrētajam produktam noteiktajiem standartiem. Ierīcē(-s) veicot ar mums nesaskaņotas izmaiņas, šī deklarācija zaudē savu spēku. Atbilstības novērtēšanas procedūra atbilstoši Direktīvas 2000/14/EK V pielikuma 14. punktam, Trokšņu līmenis: mērītais / garantētais(1). Dokumentācijas atrašanās vieta:(2) | CE marķējuma gads: 2015 | Ulm, 12.05.2023.
nl	**EU-conformiteitsverklaring** **Telescoop-heggenschaar** **Artikel nr.**	De ondergetekende bevestigt als gevolmachtigde van de fabrikant, GARDENA Germany AB, PO Box 7454, S-103 92, Stockholm, Zweden, dat het / de onderstaand vermelde apparaat/apparaten in de door ons in de handel gebrachte uitvoering voldoet / voldoen aan de eisen van de geharmoniseerde EU-richtlijnen, EU-veiligheidsnormen en productspecifieke normen. Bij een niet met ons afgestemde verandering van het apparaat/de apparaten verliest deze verklaring haar geldigheid. Overeenstemmingsbeoordelingsprocedure volgens 2000/14/EG Art.14 Bijlage V, Geluidsniveau: gemeten / gegarandeerd(1). Gedeponeerde documentatie(2) | Jaar van CE-markering: 2015 | Ulm, 12-05-2023

CE

no	**EF-samsvarserklæring** **Teleskop hekksaks** **Art.nr.**	Undertegnede bekrefter herved, som autorisert representant for produsenten, GARDENA Germany AB, PO Box 7454, S-103 92 Stockholm, Sverige, at enheten(e) angitt nedenfor er i samsvar med harmoniserte EU-retningslinjer, EU-standarder for sikkerhet og produktspesifikke standarder når de(n) forlater vår fabrikk. Denne bekreftelsen blir ugyldig hvis enheten(e) endres uten vårt samtykke. Prosedyre for samsvarsvurdering i henhold til 2000/14/EF art.14 vedlegg V, Støynivå: målt / garantert(1). Deponert dokumentasjon(2) | CE-merkingsår: 2015 | Ulm, 2023-05-12
pl	**Deklaracja zgodności UE** **Nożyce do żywopłotu z trzonkiem teleskopowym** **Nr artykułu**	Niżej podpisany potwierdza jako upoważniony przedstawiciel producenta, spółki GARDENA Germany AB, PO Box 7454, S-103 92, Sztokholm, Szwecja, że określone poniżej urządzenie/-nia w wersji wprowadzonej przez nas do obrotu spełnia / -niają wymogi zharmonizowanych dyrektyw UE, norm bezpieczeństwa UE oraz norm dotyczących konkretnych produktów. Niniejsza deklaracja traci ważność w przypadku wprowadzania nieuzgodnionych z nami zmian urządzenia / ń. Procedura oceny zgodności zgodnie z dyrektywą 2000/14/WE, art. 14, załącznik V, Poziom hałasu: zmierzony / gwarantowany(1). Zdeponowana dokumentacja(2) | Rok oznakowania CE: 2015 | Ulm, 2023-05-12
pt	**Declaração CE de Conformidade** **Corta sebes telescópico** **Artigo n.º**	O abaixo-assinado, na qualidade de representante do fabricante, GARDENA Germany AB, PO Box 7454, S-103 92, Stockholm, Schweden, confirma que o(s) aparelho(s) a seguir designado(s) no modelo lançado por nós no mercado cumpre / cumprem os requisitos das diretivas UE harmonizadas, as normas de segurança UE e as normas específicas para estes produtos. Esta declaração perde a sua validade se forem realizadas alterações no(s) aparelho(s) sem o nosso consentimento. Procedimento de avaliação da conformidade de acordo com a diretiva 2000/14/CE, Artigo 14.º, Anexo V, Nível de ruído: medido / garantido(1). Documentação depositada(2) | Ano de marcação CE: 2015 | Ulm, 12/05/2023
ro	**Declarație de conformitate UE** **Trimmer telescopic pentru gard** **Art. nr.**	Semnatarul, în calitatea sa de împuternicit al producătorului GARDENA Germany AB, PO Box 7454, S-103 92, Stockholm, Suedia, confirmă că aparatul (aparatele) descrise în cele ce urmează, în execuția pusă de noi pe piață îndeplinește (îndeplinesc) cerințele directivelor armonizate UE, ale standardelor de siguranță UE și ale standardelor specifice produsului. În cazul modificării fără aprobarea noastră prealabilă a aparatului (aparatelor), această declarație își pierde valabilitatea. Procedura de evaluare a conformității în conformitate cu 2000/14/CE Art.14 Anexa V, Nivelul de zgomot: măsurat / garantat(1). Documentație depusă(2) | Anul marcajuluiCE: 2015 | Ulm, 2023-05-12
ru	**Декларация соответствия ЕС** **Телескопические ножницы для живой изгороди** **Арт. №**	Нижеподписавшийся официальный представитель компании GARDENA Germany AB, PO Box 7454, S-103 92, г. Стокгольм, Швеция, настоящим удостоверяет, что в момент отгрузки с завода указанные ниже изделия соответствуют согласованным директивам ЕС, стандартам безопасности ЕС и стандартам для конкретного изделия. Данный сертификат аннулируется в случае модификации изделия без нашего разрешения. Процедура оценки соответствия согласно 2000/14/EC Art.14, приложение V, Уровень шума: измеренный / гарантированный(1). Размещенная документация(2) | Год маркировки CE: 2015 | Ulm, 2023-05-12
sk	**EÚ vyhlásenie o zhode** **Teleskopické nožnice na živý plot** **č. v.**	Dolu podpísaný potvrdzuje, ako splnomocnený zástupca výrobcu, GARDENA Germany AB, PO Box 7454, S-103 92, Štokholm, Švédsko, že ďalej označené zariadenie / a vo vyhotovení uvedenom na trh spĺňa / jú požiadavky harmonizovaných smerníc EÚ, bezpečnostných štandardov EÚ a predpisov, špecifických pre dané výrobky. Pri zmene zariadenia / zariadení, ktorá nebola odsúhlasená našou spoločnosťou, stráca toto vyhlásenie platnosť. Postup posudzovania zhody podľa smernice 2000/14/ES článku 14 prílohy V, Hladina hluku: meraná / zaručená(1). Uložená dokumentácia(2) | Rok udelenia označenia CE: 2015 | Ulm, 12.05.2023
sl	**Izjava EU o skladnosti** **Teleskopske škarje za živo mejo** **Št. izd.**	Spodaj podpisani kot pooblaščenec proizvajalca GARDENA Germany AB, PO Box 7454, S-103 92, Stockholm, Švedska, potrjuje, da v nadaljevanju označene naprave v izvedbi, v kakršni smo jih dali v promet, izpolnjujejo zahteve usklajenih direktiv EU, varnostnega standarda EU in standardov, ki veljajo za posamezne izdelke. V primeru spremembe naprave, ki ni usklajena z nami, ta izjava neha veljati. Postopek ugotavljanja skladnosti v skladu s členom 14 Direktive 2000/14/ES 14. priloga V, Raven hrupa: izmerjena / zajamčena(1). Deponirana dokumentacija(2) | letnica oznake CE: 2015 | Ulm, 12.05.2023
sr	**EZ deklaracija o usaglašenosti** **Teleskopske makaze za živicu** **Br. stavke**	Dole potpisani ovim potvrđuje kao ovlašćeni predstavnik proizvođača kompanije GARDENA Germany AB, PO Box 7454, S-103 92 Stokholm, Švedska, ovim potvrđuje da dole navedeni uređaji u obliku plasiranom na tržište ispunjavaju zahteve harmonizovanih EU smernica, EU bezbednosnih standarda i standarda za određene proizvode. Ova izjava postaje ništavna u slučaju izmene uređaja koje nismo odobrili. Procedura provere usaglašenosti u skladu sa 2000/14/EZ član 14 aneks V, Nivo buke: izmere / garantovan(1). Predata dokumentacija(2) | Godina CE znaka: 2015 | Ulm, 12.05.2023.
sv	**EU-försäkran om överensstämmelse** **Teleskophäcksax** **Artikelnr**	Undertecknad intygar som befullmäktigad företrädare för tillverkaren, GARDENA Germany AB, PO Box 7454, S-103 92, Stockholm, Sverige, att nedan angiven apparat / nedan angivna apparater i det utförande vi har släppt på marknaden, uppfyller fordringarna i de harmoniserade EU-direktiven, EU-säkerhetsstandarderna och de produktspecifika standarderna. Denna försäkran upphör att gälla vid en ändring av apparaten / apparaterna som inte har stämts av med oss. Förfarande för bedömning av överensstämmelse enligt 2000/14/EG art.14 bilaga vi, Bullernivå: uppmätt / garanterad(1). Desatt dokumentation(2) | År för CE-märkning: 2015 | Ulm, 2023-05-12
sq	**Deklarata e konformitetit e KE-së** **Prerëse ligustrash teleskop** **Nr. i artikullit**	Nëpërmjet këtij dokumenti, i nënshkruari vërteton si përfaqësuesi i autorizuar i prodhuesit, GARDENA Germany AB, PO Box 7454, S-103 92, Stockholm, Sweden, se, në momentin e largimit nga fabrika, njësia/njësitë e përcaktuara më poshtë është/janë në përputhje me udhëzimet e harmonizuara të BE-së, standardet e sigurisë të BE-së dhe standardet specifike të produktit. Kjo certifikatë bëhet e pavlefshme nëse njësia/njësitë modifikohet/modifikohen pa miratimin tonë. Procedura e vlerësimit të konformitetit sipas nenit 14 të Direktivës 2000/14/KE, Shtojca V, Niveli i zhurmës: i matur / i garantuar(1). Dokumentacioni i depozituar(2) | Viti i markimit CE: 2015 | Ulm, 2023-05-12
tr	**AT Uyumluluk Bildirimi** **Teleskopik çit budayıcısı** **Parça No.**	Aşağıda imzası bulunan GARDENA Germany AB, PO Box 7454, S-103 92, Stockholm, İsveç üretici yetkili temsilcisi, aşağıda belirtilen ünitelerin fabrikamızdan ayrılırken uyumlu hale getirilmiş AB yönergeleri, AB güvenlik standartları ve ürüne özel standartlara uygun olduğunu onaylamaktadır. Üniteler, onayımız olmadan değiştirilirse bu sertifika geçerliliğini yitirir. 2000/14/AT Madde 14 Ek V uyarınca Uyumluluk Değerlendirme prosedürü, Gürültü düzeyi: ölçülmüş / garantili(1). Gönderilen Belgeler(2) | CE işareti yılı: 2015 | Ulm, 2023-05-12
uk	**Декларація про відповідність ЄС** **Телескопічний кущоріз** **Арт. №**	Особи, що підписали цей документ як представники виробника, компанії GARDENA Germany AB, PO Box 7454, S-103 92, Стокгольм, Швеція, цим документом затверджує, що на момент виходу з нашого заводу вироби, що зазначені нижче, відповідали узгодженим вказівкам ЄС, стандартам ЄС із безпеки та спеціальним стандартам, застосовним до цих виробів. У разі внесення не затверджених нами змін до виробів, цей сертифікат анулюється. Було проведено процедуру оцінки відповідності згідно з додатком V статті 14 Директиви Ради Європи 2000/14/EC, Рівень шуму, виміряний / гарантований(1). Депонована документація(2) | Рік маркування CE: 2015 | М. Ульм, 12.05.2023

THS 500/48 **8883-xx**

(1) **96 dB(A) / 98 db(A)**

2006/42/EG	EN ISO 12100
2000/14/EG	EN 62841-1
2014/30/EU	EN 62841-4-2
2011/65/EU	

GARDENA®

(2) GARDENA Manufacturing GmbH
M. Jäger
Hans-Lorenser-Str. 40
89079 Ulm/Germany

Martin Lienhard
Senior Vice President
Business Unit Electric and Battery

Deutschland / Germany
GARDENA Manufacturing GmbH
Central Service
Hans-Lorenser-Straße 40
D-89079 Ulm
Produktfragen:
(+49) 731 490-123
Reparaturen:
(+49) 731 490-290
www.gardena.com/de/kontakt

Albania
KRAFT SHPK
Autostrada Tirane-Durres
Km 7
1051 Tirane
Phone: (+355) 69 877 7821
info@kraft.al

Argentina
ROBERTO C. RUMBO S.R.L.
Predio Norlog
Lote 7
Benavidez. ZC: 1621
Buenos Aires
Phone: (+54) 11 5263-7862
ventas@rumbosrl.com.ar

Armenia
AES Systems LLC
Marshal Babajanyan Avenue 56/2
0022 Yerevan
Phone: (+374) 60 651 651
masisohanyan@icloud.com

Australia
Husqvarna Australia Pty. Ltd.
Locked Bag 5
Central Coast BC
NSW 2252
Phone: (+ 61) (0) 2 4352 7400
customer.service@husqvarna.com.au

Austria / Österreich
Husqvarna Austria GmbH
Industriezeile 36
4010 Linz
Tel.: (+43) 732 77 01 01-485
service.gardena@husqvarnagroup.com

Azerbaijan
Progres Xüsusi Firması
Aliyar Aliyev 212, Baku, Azerbaijan
Sales: +994 70 326 07 14
Aftersales: +994 77 326 07 14
www.progress-garden.az
info@progress-garden.az

Bahrain
M.H. Al-Mahroos
BUILDING 208, BLOCK 356,
ROAD 328
Salhiya
Phone: +973 1740 8090
almahroos@almahroos.com

Belarus / Беларусь
ООО «Мастер Гарден»
220118, г. Минск,
улица Шаранговича, дом 7а
Тел. (+375) 17 257 00 33
mg@mastergarden.by

Belgium
Husqvarna Belgium nv
Gardena Division
Leuvensesteenweg 542
Planet II E
1930 Zaventem
België

Bosnia / Herzegovina
Silk Trade d.o.o.
Poslovna Zona Vila Br. 20
Phone: (+387) 61 165 593
info@silktrade.com.ba

Brazil
Nordtech Maquinas e Motores Ltd.
Avenida Juscelino Kubitschek
de Oliveira Curitiba
3003 Brazil
Phone: (+55) 41 3595-9600
contato@nordtech.com.br
www.nordtech.com.br

Bulgaria
AGROLAND България АД
бул. 8 Декември, № 13
Офис 5
1700 Студентски град
София
Тел.: (+359) 24 66 6910
info@agroland.eu

Canada / USA
GARDENA Canada Ltd.
125 Edgeware Road
Unit 15 A
Brampton L6Y 0P5
ON, Canada
Phone: (+1) 905 792 93 30
gardena.customerservice@husqvarnagroup.com

Chile
REPRESENTACIONES JCE S.A.
AV. DEL VALLE NORTE 857 PISO 4
HUECHURABA, SANTIAGO, CHILE
Phone: (+ 56) 2 2414 2600
contacto@jce.cl

China
Husqvarna (Shanghai)
Management Co., Ltd.
富世华（上海）管理有限公司
3F, Benq Square B,
No 207, Song Hong Rd.,
Chang Ning District,
Shanghai, PRC. 200335
上海市长宁区淞虹路207号明
基广场B座3楼, 邮编: 200335

Colombia
Equipos de Toyama Colombia SAS
Cra. 68 D No 25 B 86 Of. 618
Edificio Torre Central
Bogota
Phone: +57 (1) 703 95 20 /
+57 (1) 703 95 22
servicioalcliente@toyama.com.co
www.toyama.com.co

Costa Rica
Exim CIA Costa Rica
Calle 25A, B°. Montealegre
Zapote
San José
Costa Rica
Phone: (+506) 2221-5654 / (+506) 2221-5659
eximcostarica@gmail.com

Croatia
Husqvarna Austria GmbH
Industriezeile 36
4010 Linz
Phone: (+43) 732 77 01 01-485
service.gardena@husqvarnagroup.com

Cyprus
Pantelis Papadopoulos S.A.
92 Athinon Avenue
Athens
10442 Greece
Phone: (+30) 21 0519 3100
infocy@papadopoulos.com.gr

Czech Republic
Gardena
Service Center Vrbno
c/o Husqvarna
Manufacturing CZ s.r.o.
Jesenická 146
79326 Vrbno pod Pradedem
Phone: 800 100 425
servis@gardena.cz

Denmark
GARDENA DANMARK
Lejrvej 19, st.
3500 Værløse
Tlf.: (+45) 70 26 47 70
gardenadk@husqvarnagroup.com
www.gardena.com / dk

Dominican Republic
BOSQUESA, S.R.L
Carretera Santiago Licey
Km. 5 ½
Esquina Copal II.
Santiago De Los Caballeros
51000 Dominican Republic
Phone: (+1) 809-562-0476
contacto@bosquesa.com.do

Egypt
Universal Agencies Co
26, Abdel Hamid Lotfy St.
Giza
Phone: (+20) 3 761 57 57

Estonia
Husqvarna Eesti OÜ
Valdeku 132
EE-11216 Tallinn
info@gardena.ee

Finland
Oy Husqvarna Ab
Juurakkotie 5 B 2
01510 Vantaa
www.gardena.fi

France
Husqvarna France
9/11 Allée des pierres mayettes
92635 Genneviliers Cedex
France
http://www.gardena.com/fr
N° AZUR: 0 810 00 78 23
(Prix d'un appel local)

Georgia
Transporter LLC
#70, Beliashvili street
0159 Tbilisi, Georgia
Number: (+995) 322 14 71 71
info@transporter.com.ge
www.transporter.com.ge

Service Address and Importer to Great Britain
Husqvarna UK Ltd
Preston Road
Aycliffe Industrial Park
Newton Aycliffe
County Durham
DL5 6UP
Phone: (+44) (0) 344 844 4558
info.gardena@husqvarna.co.uk

Greece
Π.ΠΑΠΑΔΟΠΟΥΛΟΣ ΑΕΒΕ
Λεωφ. Αθηνών 92
Αθήνα
Τ.Κ.104 42
Ελλάδα
Τηλ. (+30) 210 5193 100
info@papadopoulos.com.gr

Hong Kong
Tung Tai Company
151-153 Hoi Bun Road
Kwun Tong, Kowloon
Hong Kong
Phone: (+852) 3583 1662
admin@tungtaico.com

Hungary
Husqvarna Magyarország Kft.
Ezred u. 1 – 3
1044 Budapest
Phone: (+36) 1 251-4161
vevoszolgalat.husqvarna@husqvarna.hu

Iceland
BYKO ehf.
Skemmuvegi 2a
200 Kópavogur
Phone: (+354) 515 4000
byko@byko.is

MHG Verslun ehf
Víkurhvarf 8
203 Kópavogur
Phone: (+354) 544 4656

India
B K RAMAN AND CO
Plot No. 185, Industrial Area,
Phase-2, Ram Darbar
Chandigarh
160002 India
Phone: (+91) 98140 06530
raman@jaganhardware.com

Iraq
Alshiemal Alakhdar Company
Al-Faysalieah, Near Estate Bank
Mosul
Phone: (+964) 78 18 18 46 75

Ireland
Liffey Distributors Ltd.
309 NW Business Park, Ballycoolen
15 Dublin
Phone: (+353) 1 824 2600
info@liffeyd.com

Israel
HAGARIN LTD.
2 Nahal Harif St.
8122201 Yavne
internet@hagarin.co.il
Phone: (+972) 8-932-0400

Italy
Husqvarna Italia S.p.A.
Centro Direzionale Planum
Via del Lavoro 2, Scala B
22036 ERBA (CO)
Phone: (+39) (0) 31 4147700
assistenza.italia@it.husqvarna.com

Japan
Husqvarna Zenoah Co. Ltd. Japan
1-9 Minamidai, Kawagoe
350-1165 Saitama
Japan
gardena-jp@husqvarnagroup.com

Kazakhstan
ТОО "Ламэд"
Russian
Адрес: Казахстан, г. Алматы,
ул. Тажибаевой, 155/1
Тел.: (+7) (727) 355 64 00 /
(+7) (700) 355 64 00
lamed@lamed.kz

Kazakh
Мекен-жайы: Қазақстан,
Алматы қ.,
көш. Тажибаевой, 155/1
Тел.: (+7) (727) 355 64 00 /
(+7) (700) 355 64 00
lamed@lamed.kz

Kuwait
Palms Agro Production Co
Al Rai- Fourth Ring Road – Block 56.
P.O Box: 1976 Safat
13020 Al-Rai
Phone: (+965) 24 73 07 45
info@palms-kw.com

Kyrgyzstan
ООсО Alye Maki
Av. Moladaya Guardia 83
720014 Bishkek
Phone: (+996) 312 322115

Latvia
Husqvarna Latvija SIA
Ulbrokas 19A
LV-1021 Riga
info@gardena.lv

Lebanon
Technomec
Safra Highway (Beirut – Tripoli) Center
622 Mezher Bldg.
P.O.Box 215
Jounieh
Phone: (+961) 9 853527 /
(+961) 3 855481
tecnomec@idm.net.lb

Lithuania
UAB Husqvarna Lietuva
Ateities pl. 77C
LT-52104 Kaunas
info@gardena.lt

Luxembourg
Magasins Jules Neuberg
39, rue Jacques Stas
Luxembourg-Gasperich 2549
Case Postale No. 12
Luxembourg 2010
Phone: (+352) 40 14 01
api@neuberg.lu

Malaysia
Glomedic International Sdn Bhd
Jalan Ruang No. 30
Shah Alam, Selangor
40150 Malaysia
Phone: (+60) 3-7734 7997
oase@glomedic.com.my

Malta
I.V. Portelli & Sons Ltd.
85, 86, Triq San Pawl
Rabat - RBT 1240
Phone: (+356) 2145 4289

Mauritius
Espace Maison Ltée
La City Trianon, St Jean
Quatre Bornes
Phone: (+230) 460 85 85
digital@espacemaison.mu

Mexico
AFOSA
Av. Lopez Mateos Sur # 5019
Col. La Calma 45070
Zapopan, Jalisco, Mexico
Phone: (+52) 33 3818-3434
isolis@afosa.com.mx

Moldova
Convel SRL
Republica Moldova,
mun. Chisinau,
sos. Muncesti 284
Phone: (+373) 22 857 126
www.convel.md

Mongolia
Soyolj Gardening Shop
Namii Rd
Ulaanbaatar
14230 Mongolia
Phone: +976 7777 5080
soyolj@magicnet.mn

Morocco
Proekip
64 Rue de la Participation
Casablanca-Roches Noires
20303 Morocco
Phone: (+212) 661342107
hicham.hafani@proekip.ma

Netherlands
Husqvarna Nederland B.V.
GARDENA Division
Postbus 50131
1305 AC ALMERE
Phone: (+31) 36 521 00 10
info@gardena.nl

Neth. Antilles
Jonka Enterprises N.V.
Sta. Rosa Weg 196
P.O. Box 8200
Curaçao
Phone: (+599) 9 767 66 55
info@jonka.com

New Zealand
Husqvarna New Zealand Ltd.
PO Box 76-437
Manukau City 2241
Phone: (+64) (0) 9 9202410
support.nz@husqvarna.co.nz

North Macedonia
Sinpeks d.o.o.
Ul. Kravarski Pat Bb
7000 Bitola
Phone: (+389) 47 20 85 00
sinpeks@mt.net.mk

Norway
Husqvarna Norge AS
Gardena Division
Trøskenveien 36
1708 Sarpsborg
info@gardena.no

Northern Cyprus
Mediterranean Home & Garden
No 150 Alsancak, Karaoğlanoğlu
Caddesi Girne
Phone: (+90) 392 821 33 80
info@medgardener.com

Oman
General Development Services
PO 1475, PC - 111
Seeb
111 Oman
Phone: 96824582816
gdsoman@gdsoman.com

Paraguay
Agrofield SRL
AV. CHOFERES DEL CHACO
1449 C/25 DE MAYO
Asuncion
Phone: (+595) 21 608 656
consultas@agrofield.com.py

Peru
Sierras y Herramientas Forestal SAC
Av. Las Gaviotas 833, Chorrillos
Lima
Phone: (+51) 1 2 52 02 52
supervisorventas1@siersac.com
www.siersac.com

Philippines
Royal Dragon Traders Inc
10 Linaw Street, Barangay
Saint Peter Quezon City
1114 Philippines
Phone: (+63) 2 7426893
aida.fernandez@rdti.com.ph

Poland
Gardena Service Center Vrbno
c/o Husqvarna Manufacturing CZ
s.r.o. Jesenická 146
79326 Vrbno pod Pradedem
Czech Republic
Phone: (22) 336 78 90
serwis@gardena.pl

Portugal
Husqvarna Portugal, SA
Lagoa - Albarraque
2635 - 595 Rio de Mouro
Phone: (+351) 21 922 85 30
Fax: (+351) 21 922 85 36
info@gardena.pt

Romania
Madex International Srl
Soseaua Odaii 117 - 123,
RO 013603 Bucureşti, S1
Phone: (+40) 21 352 7603
madex@ines.ro

Russia / Россия
ООО „Хускварна"
141400, Московская обл.,
г. Химки,
улица Ленинградская,
владение 39, стр.6
Бизнес Центр
„Химки Бизнес Парк",
помещение ОВ02_04
http://www.gardena.ru

Saudi Arabia
SACO
Takhassusi Main Road P.O. Box:
86387 Riyadh 12863
40011 Saudi Arabia
Phone: (966) 11 482 8877
webmaster@saco-ksa.com

Al Futtaim Pioneer Trading
5147 Al Farooq Dist.
Riyadh 7991
Phone: (+971) 4 206 6700
Owais.Khan@alfuttaim.com

Serbia
Domel d.o.o.
Slobodana Đurića 21
11000 Belgrade
Phone: (+381) 11 409 57 12
office@domel.rs

Singapore
Hy-Ray PRIVATE LIMITED
40 Jalan Pemimpin
#02-08 Tat Ann Building
Singapore 577185
Phone: (+65) 6253 2277
info@hyray.com.sg

Slovak Republic
Gardena
Service Center Vrbno
c/o Husqvarna
Manufacturing CZ s.r.o.
Jesenická 146
79326 Vrbno pod Pradedem
Phone: 0800 154044
servis@gardena.sk

Slovenia
Husqvarna Austria GmbH
Industriezeile 36
4010 Linz
Phone: (+43) 732 77 01 01-485
service.gardena@husqvarnagroup.com

South Africa
Husqvarna South Africa (Pty) Ltd
Lifestyle Business Park –
Ground Floor Block A Cnr
Beyers Naude Drive and Ysterhout
Road Randpark Ridge, Randburg
Phone: (+27) 10 015 5750
service@gardena.co.za

South Korea
Kyung Jin Trading Co., Ltd
8F Haengbok Building, 210,
Gangnam-Daero 137-891 Seoul
Phone: (+82) 2 574 6300
kjh@kjh.co.kr

Spain
Husqvarna España S.A.
Calle de Rivas nº 10
28052 Madrid
Phone: (+34) 91 708 05 00
atencioncliente@gardena.es

Sri Lanka
Hunter & Company Ltd.
130 Front Street
Colombo
Phone: 94-11 232 81 71
hunters@eureka.lk

Suriname
Deto Handelmaatschappij N.V.
Kernkampweg 72-74
P.O. Box: 12782
Paramaribo
Suriname
Phone: (+597) 43 80 50
info@deto.sr

Sweden
Husqvarna AB /
GARDENA Sverige
Drottninggatan 2
561 82 Huskvarna
Sverige
Phone: (+46) (0) 36-14 60 02
service@gardena.se

Switzerland / Schweiz
Husqvarna Schweiz AG
Consumer Products
Industriestrasse 10
5506 Mägenwil
Phone: (+ 41) (0) 62 887 37 90
info@gardena.ch

Taiwan
Hong Ying Trading Co., Ltd.
No. 46 Wu-Kun-Wu Road
New Taipei City
Phone: (+886) (02) 2298 1486
salesgd1@7friends.com.tw

Tajikistan
ARIERS JV LLC
39, Ayni Street, 734024
Dushanbe, Tajikistan

Thailand
Spica Co. Ltd
243/2 Onnuch Rd., Prawat
Bangkok
10250 Thailand
Phone: (+66) (0)2721 7373
surapong@spica-siam.com

Tunisia
Société du matériel agricole et maritime
Nouveau port de peche de Sfax Bp 33
Sfax 3065
Phone: (+216) 98 419047/
(+216) 74 497614
commercial@smamtunisia.com

Türkiye
Dost Bahçe
Yunus Mah. Adil Sk. No:3
Kartal
Istanbul
34873 Türkiye
Phone: (+90) 216 389 39 39

Turkmenistan
I.E. Orazmuhammedov Nurmuhammet
80 Ataturk, BERKARAR Shopping Center,
Ground floor, A77b,
Ashgabat 744000
TURKMENISTAN
Phone: (+993) 12 468859
Mob: (+993) 62 222887
info@jayhyzmat.com /
bekgiyev@jayhyzmat.com
www.jayhyzmat.com

UAE
Al-Futtaim ACE Company
L.L.C Building, Al Rebat Street
Festival City, Dubai
7880 UAE
Phone: (+971) 4 206 6700
ace@alfuttaim.ae

Ukraine / Україна
АТ «Альцест»
вул Петропавлівська 4
08130, Київська обл.
Києво-Святошинський р-н. с.
Петропавлівська Борщагівка Україна
Тел.: (+38) 0 800 503 000

Uruguay
FELI SA
Entre Rios 1083
11800 Montevideo
Phone: (+598) 22 03 18 44
info@felisa.com.uy

Uzbekistan
AGROHOUSE MChJ
O'zbekiston, 111112
Toshkent viloyati
Toshkent tumani
Hasanboy QFY, THAY yoqasida
Phone: (+998)-93-5414141 /
(+998)-71-2096868
info@agro.house
www.agro.house

Vietnam
Vision Joint Stock Company
BT1-17, Khu biet thu –
Khu Đoan ngoai giao Nguyen Xuan Khoat
Xuan Đinh, Bac Tu Liem
Hanoi, Vietnam
Phone: (+8424)-38462833/34
quynhnm@visionjsc.com.vn

Zimbabwe
Cutting Edge
159 Citroen Rd, Msasa
Harare
Phone: (+263) 8677 008685
sales@cuttingedge.co.zw

8883-20.960.05/0723
© GARDENA Manufacturing GmbH
D-89079 Ulm
http://www.gardena.com