Flymo®

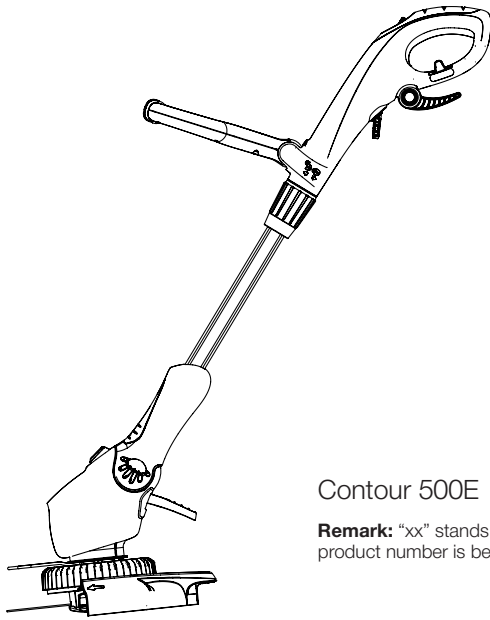

Contour 500E CTE25 Art. 9672414-xx

Remark: “xx” stands for customer and country variants. The basic product number is before the hyphen.

en **Operation Instructions**
Turbotrimmer

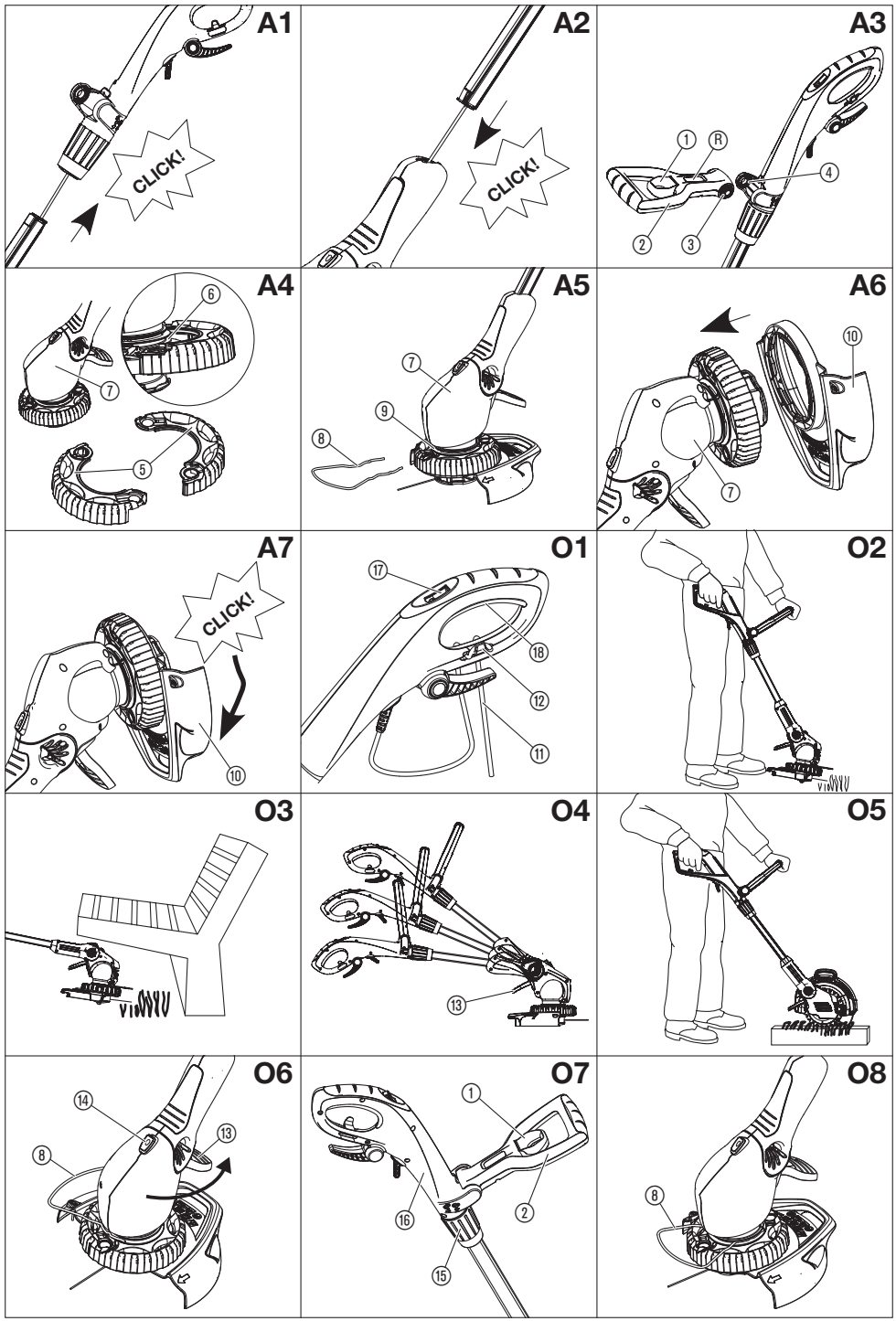
A1
CLICK!
A2
CLICK!
A3
1
R
4
2
3
A4
6
7
5
A5
7
9
8
A6
10
7
A7
CLICK!
10
O1
17
18
12
11
O2
O3
O4
13
O5
O6
14
13
8
O7
1
16
2
15
O8
8

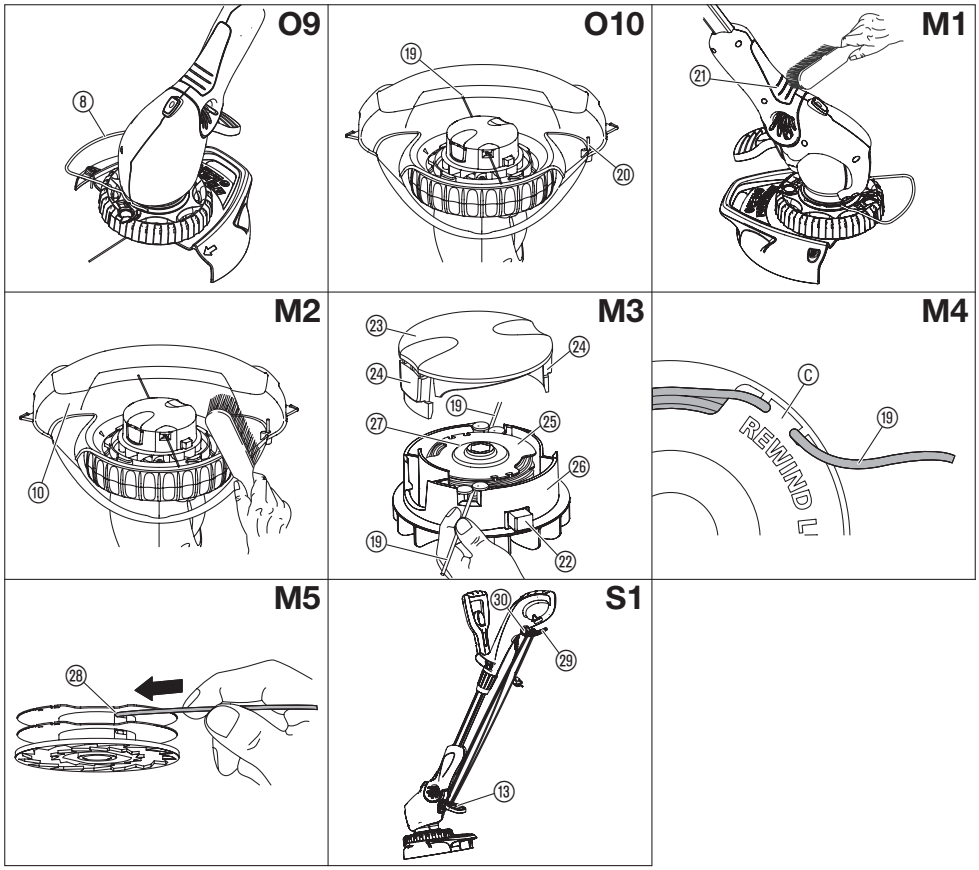

FLYMO Turbotrimmer Contour 500E

Table of Contents:

1. SAFETY INSTRUCTIONS 4
2. ASSEMBLY 5
3. OPERATION 5
4. MAINTENANCE 6
5. STORAGE 7
6. TROUBLESHOOTING 8
7. TECHNICAL DATA 9
8. ACCESSORIES/SPARE PARTS 9
9. WARRANTY/SERVICE 9

The initial language of these instructions is English. Other language versions are translations of the initial instructions.

This product may be used under supervision, or if instruction regarding the safe use of the product has been provided and the resulting dangers have been understood, by children aged 8 and above, as well as by persons with physical, sensory or mental disabilities or a lack of experience and knowledge. Children must not be allowed to play with the product. Cleaning and user maintenance must not be performed by children without supervision. The use of this product by young people under the age of 16 is not recommended. Never operate the product when you are tired, ill or under the influence of alcohol, drugs or medicine.

Intended use:

The FLYMO Turbotrimmer is used to trim and to cut grass and lawns in private house and hobby gardens.

Do not use the product in public facilities, parks, sports grounds, adjacent to roads or in agriculture or forestry.

DANGER! Risk of injury!

→ Do not use the product to cut hedges, to shred or to make compost.

1. SAFETY INSTRUCTIONS

Symbols on the product:

Read operator's manual.

Keep other persons away.

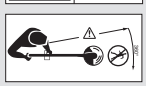

Danger!
Risk of injury to other persons!
→ Keep other persons out of the work area.

Wear safety glasses and ear protection.

Do not let the product become wet with rain or other moisture. Do not leave the product outdoors while it is raining.

Disconnect the mains cable if the cable becomes damaged or entangled.

General safety warnings

Important

Read carefully before use.

Keep for further reference.

Safe operating practices

Training

a) Read the instructions carefully. Be familiar with the controls and the correct use of the machine.

b) Never allow children or people unfamiliar with these instructions to use the machine. Local regulations can restrict the age of operator.

c) Keep in mind that the operator or user is responsible for accidents or hazards occurring to other people or their property.

Preparation

a) Before use check the supply and extension cord for signs of damage or aging. If the cord becomes damaged during use, disconnect the cord from the supply immediately.
DO NOT TOUCH THE CORD BEFORE DISCONNECTING THE SUPPLY.
Do not use the machine if the cord is damaged or worn.

b) Before use, always visually inspect the machine for damaged, missing or misplaced guards or shields.

c) Never operate the machine while people, especially children, or pets are nearby.

Operation

a) Keep supply and extension cords away from cutting means.

b) Wear eye protection and stout shoes at all times while operating the machine.

c) Avoid using the machine in bad weather conditions especially when there is a risk of lightning.

d) Use the machine only in daylight or good artificial light.

e) Never operate the machine with damaged guards or shields or without guards or shields in place.

f) Switch on the motor only when the hands and feet are away from the cutting means.

g) Always disconnect the machine from the power supply (i.e. remove the plug from the mains, remove the disabling device or removable battery).
1) whenever the machine is left unattended;
2) before clearing a blockage;
3) before checking, cleaning or working on the machine;
4) after striking a foreign object;
5) whenever the machine starts vibrating abnormally.

h) Take care against injury to feet and hands from the cutting means.

i) Always ensure that the ventilation openings are kept clear of debris.

Maintenance and storage

a) Disconnect the machine from the power supply (i. e. remove the plug from the mains, remove the disabling device or removable battery) before carrying out maintenance or cleaning work.

b) Use only the manufacturer's recommended replacement parts and accessories.

c) Inspect and maintain the machine regularly. Have the machine repaired only by an authorized repairer.

d) When not in use, store the machine out of reach of children.

Recommendation

The machine should be supplied via a residual current device (RCD) with a tripping current of not more than 30 mA.

Cables

Use only permitted extension cables as per HD 516.

→ Ask your electrical specialist.

If the unit got hot during operation, let it cool down before storage.

Additional Safety warnings

Warning! Keep toddlers away when you assemble the unit. *Small parts can be easily swallowed. There is also*

a risk that the polybag can suffocate toddlers.

Warning! When wearing hearing protection, and due to the noise produced by the unit, the operator may not notice persons approaching.

If the unit starts unintentionally when the mains plug is connected, disconnect the mains at once.
Contact FLYMO Service to check the unit.

Warning! This unit makes an electromagnetic field while it operates. This field may under some conditions interfere with active or passive medical implants. To decrease the risk of conditions that can possibly injure or kill, we recommend persons with medical implants to speak with their physician and the medical implant manufacturer before operating.
If your trimmer is damaged in any way contact your local approved service centre.

→ Never use a damaged trimmer.

Inspect the area to be cut before each use. Remove all objects such as stones, broken glass, nails, wire, string etc, which can be thrown or become entangled in the trimmer head.

Warning: The cutting line continues to rotate after the machine has been switched off.

Warning: Beware of finger entrapment while putting the upper and the lower shaft together [Fig. A1].

Unplug the device immediately in case it doesn't stop anymore.

Do not lean over the trimmer guard – objects may be thrown by the cutting line.

Don't use the trimmer for pond, river, stream, or creek care. Water in the product could cause a malfunction, or an electrical shock.

Do not operate the trimmer in explosive atmospheres, such as in the presence of flammable liquids, gases or dust. Trimmers create sparks which may ignite the dust or fumes.

If the unit starts unintentionally when the mains plug is connected, disconnect the mains at once.
Contact FLYMO to check the unit.

2. ASSEMBLY

CAUTION!
The trimmer may only be operated provided that the protective cover ⑩ is assembled.

To assemble the trimmer:

1. Insert the tube into the switch handle [Fig. A1].
   Make sure that the internal cable is not twisted.
2. Push until it clicks into position.
   Make sure that the tube is fully located by attempting to remove it.
3. Insert the tube into the trimmer head [Fig. A2].
   Make sure that the internal cable is not twisted.
4. Push until it clicks into position.
   Make sure that the tube is fully located by attempting to remove it.
5. Pull the lock ① belonging to the additional handle ②, push in both of the snap-fits ③ belonging to the additional handle ② and, with the grooves Ⓡ pointing forwards, snap them into the holder ④ [Fig. A3].
6. Place both halves of the impeller ⑤ around the lower groove ⑥ of the trimmer head ⑦ and close until they audibly engage [Fig. A4].
7. From the front, push the plant guard ⑧ into the upper groove ⑨ of the trimmer head ⑦. In doing so, ensure that the installed bow can rotate freely (i. e. insert the bow with the kink pointing upwards) [Fig. A5].
8. Place the protective cover ⑩ on top of the trimmer head ⑦ [Fig. A6].
9. Turn the protective cover ⑩ until it can be pushed over the trimmer head entirely.
10. Rotate the protective cover ⑩ anti-clockwise until it audibly engages [Fig. A7].

3. OPERATION

DANGER! Risk of physical injury!
Cut injury when the product starts accidentally.

→ **Before you connect, adjust or transport the product, disconnect the mains cable and transport the product by the bottom handle.**

To connect the trimmer [Fig. O1]:

DANGER! Risk of electric shock!
To avoid damage to the mains cable ⑧ it must be inserted into the cable lock ⑫.

→ **Before you operate the product insert the mains cable ⑪ into the cable lock ⑫.**

1. Loop the mains cable ⑪, insert the loop into the cable lock ⑫ and pull tight.
2. Connect the mains cable ⑪ into a 230 V mains socket.

To set the work positions:

CAUTION! Avoid contact between the ground and the trimmer head in working position 1 + 2.

Work position 1 [Fig. O2]:

For standard trimming.

Work position 2 [Fig. O3/O4]:

Trimming beneath obstacles.

1. Push the foot pedal ⑬ and lower the shaft downwards into the desired working position.
2. Release the foot pedal ⑬ and allow the shaft to engage.

Work position 3 [Fig. O5/O6]:

Vertical trimming of overhanging lawn edges.

The upright must be in the uppermost position in working position 3.

1. Turn the plant guard ⑧ through 90° into the **Parking position** until it engages.
2. Push the foot pedal ⑬ and move the upright into the uppermost position.
3. Push the button ⑭ and rotate the trimmer head from 0° to 90° until it engages.
4. With the impeller, move the trimmer along the lawn edge.

To set the trimmer to the body height [Fig. O7]:

To set the shaft length:

→ Loosen the clamping sleeve ⑮, extend the handle ⑯ to the desired shaft length and re-tighten the clamping sleeve ⑮.

The clamping sleeve ⑮ must be fastened firmly enough to prevent the shaft from being moved.

To set the additional handle:

→ Pull the lock ① belonging to the additional handle ②, set the additional handle ② to the desired incline and release the lock ①.

If the trimmer is correctly set to the body height, the posture is upright and the trimmer head in **work position 1** is tilted forwards slightly.

→ Hold the trimmer by the handle ⑫ and additional handle ② in such a manner that the trimmer head is tilted forwards slightly.

To adjust the plant guard [Fig. O8/O9]:

Working position [Fig. O8]/Parking position [Fig. O9]

→ **Turn plant guard ⑧ through 90° into the required position until it locks into place.**

To start the trimmer [Fig. O1]:

DANGER! Risk of physical injury!

Risk of injury if the product does not stop when you release the start button.

→ **Do not bypass the safety devices or switches. For example do not attach the start lever ⑱ to the handle.**

To start:

The product is fitted with a two-handed safety device (start lever ⑱ with safety interlock ⑰) to prevent the product from being turned on by accident.

1. Push the safety interlock ⑰ with one hand and pull the start lever ⑱ with the other hand.
2. Release the safety interlock ⑰.

To stop:

→ Release the start lever ⑱.

To extend the cutting filament (double auto feed system) [Fig. O10]:

A clean cut is achieved only with the maximum filament ⑲ length.

The cutting filament ⑲ is **lengthened automatically** when the filament cassette comes to a **standstill** after **switch off**.

As the filament can only be lengthened in small increments, it can be necessary in some cases to repeat the switch-off/switch-on action several times (up to 6 times). Important is that the filament cassette comes to a complete standstill each time.

The cutting filament has been sufficiently lengthened when, after switch-on, it audibly strikes the filament limiter ⑳.

The filament cassette has to be replaced when the cutting filament has been used up:

FLYMO Filament Cassette and Cutting Filament:

- **500E FLY021 Part.no.: 513937190**

4. MAINTENANCE

DANGER! Risk of physical injury!

Cut injury when the product starts accidentally.

→ **Before you maintain the product, make sure that the mains cable is disconnected.**

To clean the trimmer [Fig. M1/M2]:

DANGER! Electric shock!

Risk of injury and risk of damage to the product.

→ **Do not clean the product with water or with a water jet (in particular high-pressure water jet).**

The airflow slots must always be clean.

1. Clean the airflow slots ⑯ with a soft brush (do not use a screwdriver).
2. Clean all movable parts after each operation. Especially remove any grass and dirt from the cover ③.

To pull the cutting filament manually out of the filament cassette [Fig M3]:

A cutting filament that is too short or no longer extends automatically when the trimmer is turned on can be pulled out manually.

1. Push and release manual feed button ㉒, while you gently pull on one of the filaments ⑲ until the filament reaches the filament limiter.
2. When the required amount of filament is fed out, gently pull on the second filament (There is no need to push the manual feed button ㉒ again).
3. If the filament extends past the filament limiter, too much filament has been fed out. Remove the cassette cover ㉓ and click filament cassette anti-clockwise until the filament is at the desired length.

Always return the product to its normal operating position before you start again.

To replace the filament cassette or the cutting filament:

DANGER! Risk of physical injury!
Risk of injury from metal cutting parts!

→ **Do not use metal cutting parts or replacement parts and accessories not approved by FLYMO.**

Only use original FLYMO Filament Cassettes.

You can order Replacement Filament Cassettes from your FLYMO dealer or directly from the FLYMO Customer Service. You can buy either a Replacement Filament Cassette or the Cutting Filament only.

FLYMO Filament Cassette and Cutting Filament:

- **500E FLY021 Part.no.: 513937190**

1. Push and hold the two latches ㉔.
2. Remove the cassette cover ㉓.
3. Remove the old filament cassette ㉕.
4. Remove all dirt in the cassette holder ㉖.
5. Release one filament ⑲ from the cleat © of the new filament cassette ⑮.
6. Secure the filament ⑲ into one slot ㉗.
7. Pull approximately 10 cm of the filament ⑲ out of the filament cassette ㉕ through the slot ㉗ in the cassette holder ㉖.
8. Repeat for the second filament.
9. Put the filament cassette ㉕ into the cassette holder ㉖. *Make sure, the filament is not caught and the latches ㉔ are locked.*
10. **Check that the filament cassette ㉕ is correctly locked. (Try to remove the filament cassette ㉕ without to push the latches ㉔.**

To replace the cutting filament [Fig. M3/M5]:

1. Remove the filament cassette ㉕.
2. Remove all dirt in the cassette holder ㉖.
3. Take approximately 5 meters of one filament ⑲ and insert it into one of the filament lock holes ㉘ in the filament cassette ㉕.
4. Wind the filament ⑲ onto the filament cassette ㉕ in the direction of the arrows on the top of the filament cassette ㉕. (Wind the first filament on the upper section of the filament cassette ㉕.)
   Make sure, the filament ⑲ is neatly winded on the filament cassette ㉕.
5. Repeat for the second filament.
6. Replace the filament cassette ㉕.

5. STORAGE

To put into storage [Fig. S1]:

The product must be stowed away from children.

1. Disconnect the mains cable.
2. Clean the product.
3. Wind the cable around the cable hook ㉙ and the foot pedal ⑬. (To unwind the cable push the button ㉚ and turn the cable hook ㉙ down.)
4. Stow the product in a dry area where it has protection from frost.

Recommendation:

The product can be hung up by the handle. The cutting head is not put under too much strain if the product is stowed hanging up.

To dispose of the product:

The symbol means that the product is not domestic waste. Recycle it through your local collection system for electrical and electronic equipment.

This contributes to proper end of life waste management. Contact local authorities, domestic waste services, your GARDENA servicing dealer or retailer for information. Incorrect disposal may have potential negative effects on the environment and human health, due to the potential presence of hazardous substances.

6. TROUBLESHOOTING

DANGER! Risk of physical injury!
Cut injury when the product starts accidentally.

→ **Before you troubleshoot the product, make sure that the mains cable is disconnected.**

Problem	Possible Causes	Remedy
Filament is to short or trimmer vibrates	Filament not fed out and visible.	→ Pull the filament until it reaches the filament limiter
	Filament not removed from the cleat.	→ Remove the filament from the cleat.
	Filament is jammed on the filament cassette.	→ Rewind the filament to remove crossed loops. Check that the filament is neatly winded. If it does not help change the filament cassette.
	Filament is broken inside the filament cassette.	→ Replace the cutting filament.
Continuous clattering noise	Motor has not reached full speed before use.	→ Allow the motor to reach full speed before use.
	Too much filament has been fed out.	→ Rewind the filament.
	Filament limiter is missing.	→ Contact your local approved Service Center or Husqvarna UK Ltd. Customer Service.
Filament snaps continuously	You do not use the correct working position.	→ Use the correct working position.
	Filament is jammed on the filament cassette.	→ Rewind the filament to remove crossed loops. Check that the filament is neatly winded. If it does not help change the filament cassette.
Poor performance	The cassette holder is dirty.	→ Clean the cassette holder.

For any other malfunctions please contact the Husqvarna UK Ltd. Customer Service.
Repairs must only be done by Husqvarna UK Ltd. service departments or specialist dealers approved by FLYMO.

FLY_41565-85.960.02_2025-10-27.indd 8 27.10.25 08:56

7. TECHNICAL DATA

Turbotrimmer	Unit	Value (Contour 500E) 9672414-xx
Motor power consumption	W	500
Mains voltage	V	230
Mains frequency	Hz	50
Cutting filament thickness	mm	1.5
Cutting width	cm	25
Cutting filament supply	m	5
Cutting filament feed		Manual filament feed system
Speed of cutting filament	rpm	11,500
Weight	kg	3.1
Sound pressure level L_{pa} [1)] **Uncertainty k_{pa}**	dB(A)	80.4 2.5
Sound power level L_{WA} [2)] **measured / guaranteed**	dB(A)	92 / 96
Hand/arm vibration a_{vhw} [1)] **Uncertainty k_{vhw}**	m/s^2	2.0 1.5

Measuring process complying with: [1)] EN 50636-2-91 [2)] RL 2000/14/EC / S.I. 2001 No.1701

The stated vibration emission value has been measured according to a standardized test procedure and can be used for comparison of one electric power tool with another. It can also be used for preliminary evaluation of exposure. The vibration emission value can vary during actual use of the electric power tool.

8. ACCESSORIES/SPARE PARTS

FLYMO Filament Cassette and Cutting Filament 500E **FLY021** **Part.no.: 513937190**

9. WARRANTY/SERVICE

Please find the current contact information of our service on the back page and online:

https://www.flymo.com/uk/content/contact-us

Note:

If you purchase a GARDENA product in a country that is not a member of the European Union and there is a note (icon) referring to our GARDENA manufacturer's warranty printed on the product packaging, then the following applies: To make any claims against the warranty, simply provide the proof of purchase for the product that specifies the time and place of purchase and the item purchased. Online registration is not required for purchases outside the European Union. The manufacturer's warranty is subject to the warranty conditions available at

www.gardena.com/warranty

CE

en	EU Declaration of conformity		The undersigned Husqvarna AB, SE-561 82, Huskvarna, Sweden hereby certifies that, when leaving our factory, the unit(s) indicated below is/are in accordance with the harmonised EU guidelines, EU standards of safety and product specific standards. This certificate becomes void if the unit(s) is/are modified without our approval. Conformity assessment procedure according to 2000/14/EC Art.14 Annex VI, Noise level: measured / guaranteed(1) | EU directives(2) | Harmonised standards(3) | Deposited documentation(4) | Notified body(5) | Year of CE marking(6) | Ulm, (date of issue)(7)
	Lawn Trimmer	**Art. No.**	
	Contour 500E	**9672414-xx**	(1) **92 dB(A) / 96 dB(A)** (2) 2006/42/EG 2014/30/EU 2011/65/EU 2000/14/EG (3) EN ISO 12100 EN 60335-1 EN 50636-2-91
			(4) GARDENA Manufacturing GmbH Technische Dokumentation A. Ochs Hans-Lorenser-Str. 40 89079 Ulm/Germany (5) DEKRA Testing and Certification GmbH Handwerkstraße 15 70565 Stuttgart Deutschland Number of notified body: 0158 (6) 2014 (7) 29.11.2024
			Flymo® **Martin Lienhard** Senior Vice President Business Unit Electric and Battery

UK CA

UKCA Declaration of Conformity [only for UK] The manufacturer: Husqvarna AB, SE-561 82, Huskvarna, Sweden hereby certifies that, when leaving our factory, the unit(s) indicated below is/are in accordance with the UK Regulations, designated standards of safety and product specific designated standards. This certificate becomes void if the units are modified without our approval.	
Description of the product:	**Lawn Trimmer**
Type:	Contour 500E
Article number:	9672414-xx
UK regulations:	S.I. 2008/1597 S.I. 2016/1091 S.I. 2012/3032 S.I. 2001/1701
Designated standards:	EN ISO 12100 EN 60335-1 EN 50636-2-91
Approved body:	DEKRA Testing and Certification GmbH Handwerkstraße 15 70565 Stuttgart Germany
Approved body number:	0158
Noise level: mesured / guaranteed	92 dB(A) / 96 dB(A)
Conformity assessment procedure:	According to S.I. 2001/1701 Art. 11 Schedule 9
Deposited documentation:	GARDENA Manufacturing GmbH Technische Dokumentation A. Ochs Hans-Lorenser-Str. 40 D-89079 Ulm
UK importer: Authorised representative	Husqvarna UK Limited Preston Road Aycliffe County Durham UK DL5 6UP
Ulm, 29.11.2024	**Martin Lienhard** Senior Vice President Business Unit Electric and Battery

FLY_41565-85.960.02_2025-10-27.indd 10 27.10.25 08:56

FLY_41565-85.960.02_2025-10-27.indd 11 27.10.25 08:56

41565-85.960.02/1025
Husqvarna AB
Drottninggatan 2
SE-561 82 Huskvarna
Sweden

Service Address and Importer to Great Britain

Husqvarna UK Ltd
Preston Road
Aycliffe Industrial Park
Newton Aycliffe
County Durham
DL5 6UP
customer.services@husqvarna.co.uk

Our policy of continuous improvement means that the specification of products may be altered from time to time without prior notice.
Copyright © 2025 Flymo S.A. All rights reserved.
Flymo® and other product and feature names are registered or unregistered trademarks of Flymo S.A.